ASSEMBLY INSTRUCTIONS

"T" STAKE FLAT BENCH

	4'	6'	
REF#	**QTY**	**QTY**	**DESCRIPTION**
1	2	3	T-STAKE BENCH END
2	4		4" X 4" X 4' PROFILE
2		4	4" X 4" X 6' PROFILE
			HARDWARE KIT
3	8	12	5/16" X 7" CARRIAGE BOLT
4	8	12	5/16" FLAT WASHER
5	8	12	5/16" FLANGE NUT

STEP 1: PLACE THE 2 (OR 3 DEPENDING ON MODEL) "T" STAKE LEGS DOWN SO THE HOLES IN THE TOP OF THE "T" ARE VERTICAL TO THE GROUND WITH THE "SPIKED" END SLANTING AWAY FROM YOU. (ESTIMATE SPACING).

STEP 2: PLACE A 4" X 4" PROFILE ON THE GROUND IN FRONT OF THE "T" STAKE LEG TOPS, MAKING SURE THE "MOLD" SEAM IS FACING THE TOP OF THE "T" STAKE LEG. (THE "MOLD" SEAM SHOULD BE FACING THE GROUND WHEN THE BENCH IS INSTALLED IN AN UPRIGHT POSITION.

STEP 3: SLIDE PROFILE TO ALIGN HOLES WITH THE CORRESPONDING HOLES OF THE "T" STAKE LEGS. INSERT BOLTS THROUGH EACH HOLE IN THE PROFILE INTO THE "T" STAKE LEGS. PLACE A FLAT WASHER AND FLANGE NUT ONTO THE BOTTOM OF EACH BOLT – **HAND TIGHTEN ONLY!!**

STEP 4: PLACE THE REMAINING 4" X 4" PROFILES ON THE "T" STAKE LEGS, MAKING SURE THE "MOLD" SEAM IS FACING DOWN. REPEAT STEPS 2 & 3.

STEP 5: ONCE ALL BOLTS, WASHERS, AND NUTS ARE IN PLACE, TIGHTEN BOLTS SECURELY WITH A 3/8" DRIVE RATCHET WITH A ½" DEEP WELL SOCKET (SHIFTING BENCH WHERE NECESSARY TO INSURE A NEAT SQUARE APPEARANCE).

STEP 6: PUT THE BENCH EXACTLY WHERE YOU WANT TO INSTALL IT (STILL ON ITS SIDE). MARK THE GROUND WHERE THE "SPIKED" ENDS ARE. DIG POSTHOLES TWO FEET DEEP WHERE YOU MADE YOUR MARKS. PUT THE "SPIKED" ENDS INTO THE HOLES AND FILL WITH DIRT, OR CONCRETE FOR A MORE PERMANENT INSTALLATION.

OPTIONAL: A 7"-12" LENGTH OF PIPE OR REBAR CAN BE PLACED THROUGH THE HOLE PROVIDED IN THE BASE OF THE "T" STAKE LEGS TO ASSIST IN THEFT PREVENTION.

NOTE: PROFILES MAY BE DIRECTIONAL
AND YOU MAY NEED TO TURN THEM END-FOR-END IF THEY DO NOT LINE UP SQUARELY.

Your 100% recycled plastic park bench will give you many years of pleasure and pride,
knowing that you did your part in keeping plastic waste out of landfills and protecting our environment.

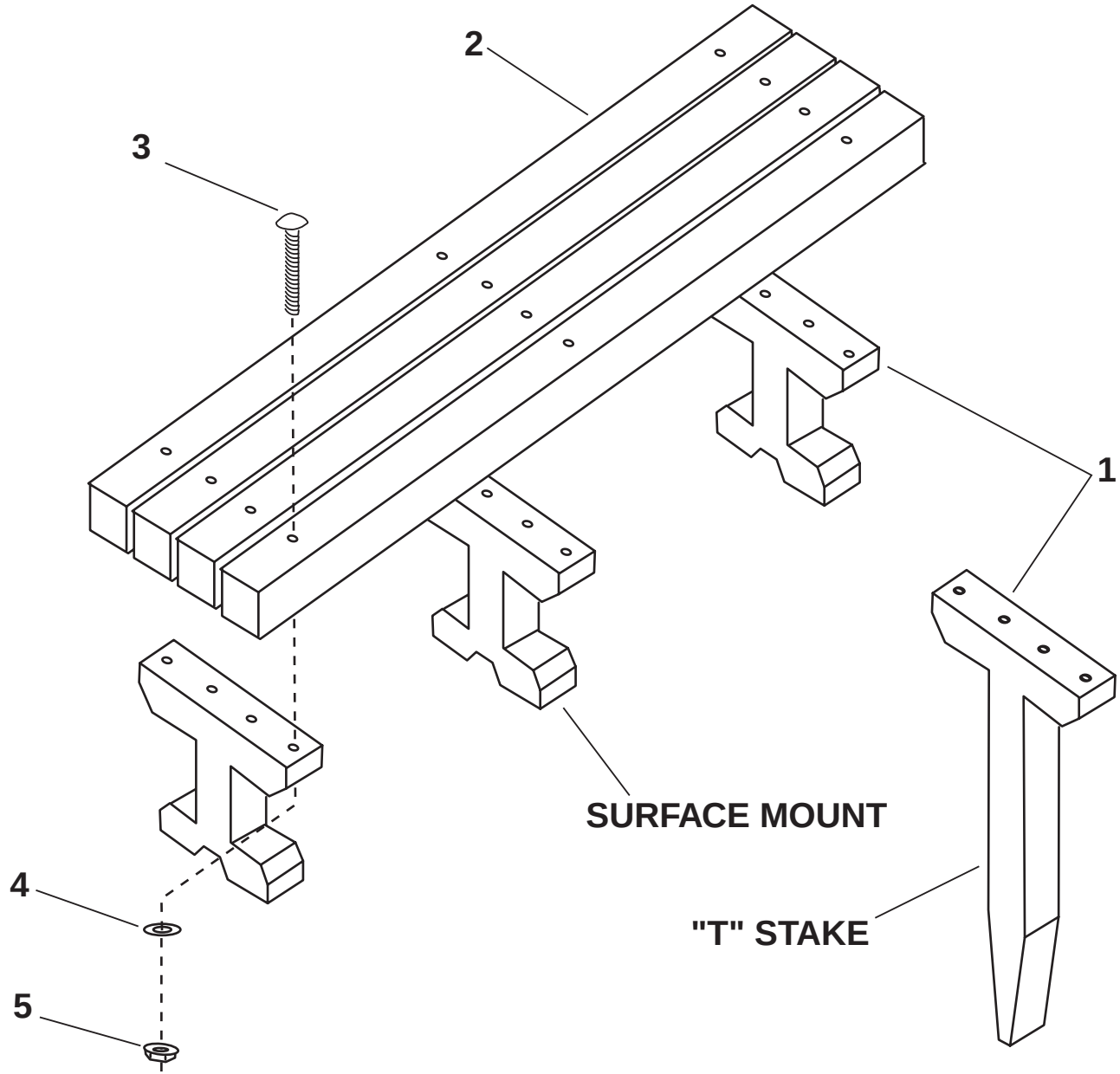
2
3
1
SURFACE MOUNT
4
"T" STAKE
5